REVISIONS				
ZONE	REV.	DESCRIPTION	DATE	APPROVED
---	A	APPROVED	10/26/2023	JV

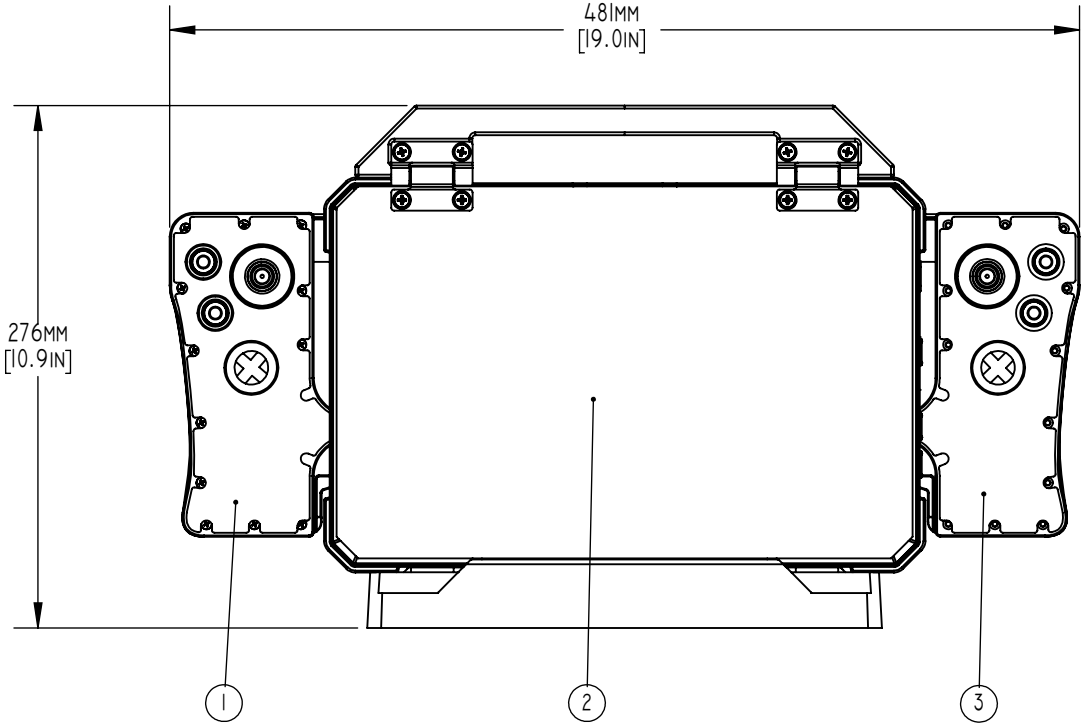

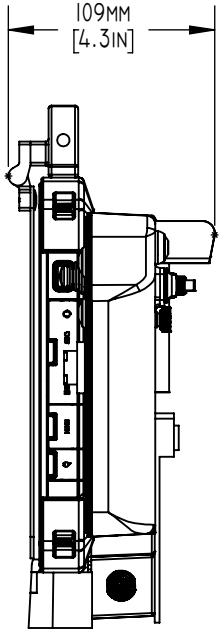

ITEM NO.	PART NUMBER	DESCRIPTION	QTY.
1	73361	Standard configuration HMI Pod Assembly - Port	1
2	73130	Splashproof Tablet Assembly	1
3	73362	Standard configuration HMI Pod Assembly - Starboard	1

VIDEORAY, LLC
212 EAST HIGH STREET, POTTSTOWN, PA 19464
USATEL: +1 610-458-3000 FAX: +1 610-458-3010
WWW.VIDEORAY.COM

THE INFORMATION CONTAINED IN THIS DRAWING IS SUPPLIED BY VIDEORAY, LLC FOR REFERENCE PURPOSES ONLY. EVERY EFFORT HAS BEEN MADE TO ENSURE THE ACCURACY OF THE INFORMATION SUPPLIED HEREIN. VIDEORAY CAN NOT BE HELD RESPONSIBLE FOR YOUR USE OF THIS INFORMATION. INFORMATION CONTAINED IN THIS DRAWING IS SUBJECT TO CHANGE WITHOUT NOTICE. FOR UPDATED OR ADDITIONAL INFORMATION, PLEASE CONTACT VIDEORAY, LLC DIRECTLY. ANY REPRODUCTION OF THIS DRAWING IN PART OR AS A WHOLE WITHOUT THE WRITTEN PERMISSION OF VIDEORAY, LLC IS PROHIBITED.

PROPRIETARY AND BUSINESS CONFIDENTIAL, ALL RIGHTS RESERVED, COPYRIGHT 2001-2015, VIDEORAY, LLC

UNITS: MM (INCHES)	THIRD ANGLE	MISSION SPECIALIST SPLASHPROOF OPERATOR CONTROLLER
		DRAWING STATUS: PRODUCTION
		72737
DRN: JV	7/30/2021	APPROX. DRY WEIGHT: -
CHK: JV	08/11/2021	APPROX. WET WEIGHT: - SIZE: A
APP: JV	11/14/2022	REV: A SCALE: 1:5 SHEET: 1 OF 1

PUBLISHED:10/26/2023